ATTACK FROM MARS (50041)

CAUTION: FOR CONTINUED PROTECTION AGAINST RISK OF FIRE, REPLACE ONLY WITH THE SAME TYPE OF FUSE HAVING THE SAME ELECTRICAL RATINGS.
ATTENTION: UTILSER UN FUSIBLE DE RECHANGE DE MEME TYPE.

FUSE LIST

POWER DRIVER BOARD

F101	Regulated 12V	T0.63A, 250V
F102	Solenoids #9 to #16	T4.0A, 250V
F103	Solenoids #1 - #8	T4.0A, 250V
F104	Solenoids #25 - #28	T4.0A, 250V
F105	+5V Logic	T4.0A, 250V
F106	+18V lamp Matrix	T5.0A, 250V
F107	Flasher Secondary	T4.0A, 250V
F108	Solenoid Secondary	T6.3A, 250V
F109	Unregulated 12V	T4.0A, 250V
F110	G.I. #5 White-Violet	T4.0A, 250V
F111	G.I. #4 White-Orange	T4.0A, 250V
F112	G.I. #3 White-Yellow	T4.0A, 250V
F113	G.I. #2 White-Orange	T4.0A, 250V
F114	G.I. #1 White-Brown	T4.0A, 250V
F115	+50V Flippers	T4.0A, 250V
F116	+50V Flippers	T4.0A, 250V
F117	+50V Flippers	T4.0A, 250V
F118	+50V Flippers	T4.0A, 250V

*May be used for circuits other than flipper circuits

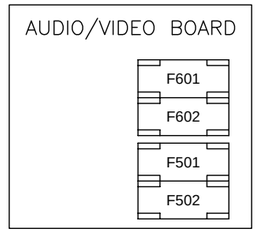

AUDIO/VIDEO BOARD

F501	-25V	T2.5A, 250V
F502	+25V	T2.5A, 250V
F601	+62V	T0.25A, 250V
F602	-113V & -125V	T0.25A, 250V

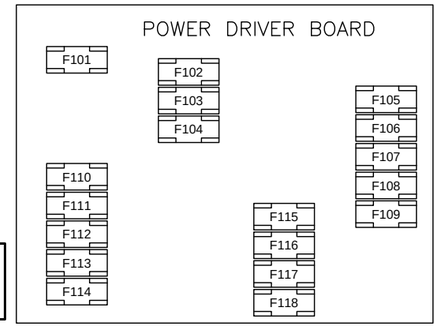

SOLENOID/FLASHER TABLE

Sol. No.	Function	Solenoid Type	Voltage Connections Playfield	Voltage Connections Backbox	Voltage Connections Cabinet	Drive Xister	Drive Connections Playfield	Drive Connections Backbox	Drive Connections Cabinet	Drive Wire Color	Solenoid Part number Flashlamp Type Playfield	Solenoid Part number Flashlamp Type Backbox
01	AUTO PLUNGER	High Power	J133-2			Q72	J116-1			Vio-Brn	AE-23-800	
02	TROUGH EJECT	High Power	J133-2			Q68	J116-2			Vio-Red	AE-26-1500	
03	LEFT POPPER	High Power	J133-2			Q71	J116-4			Vio-Org	AE-26-800	
04	RIGHT POPPER	High Power	J133-2			Q72	J116-5			Vio-Yel	AE-25-1000	
05	LEFT ALIEN LOW	High Power	J133-2			Q70	J116-6			Vio-Grn	AE-26-1500	
06	LEFT ALIEN HIGH	High Power	J133-2			Q66	J116-7			Vio-Blu	AE-26-1500	
07	KNOCKER	High Power		J133-2		Q69		J116-8		Vio-Blk		AE-23-800
08	RIGHT ALIEN HIGH	High Power	J133-2			Q65	J116-9			Vio-Gry	AE-26-1500	
09	LEFT SLINGSHOT	Low Power	J133-3			Q44	J113-1			Brn-Blk	AE-26-1200	
10	RIGHT SLINGSHOT	Low Power	J133-3			Q48	J113-3			Brn-Red	AE-26-1200	
11	LEFT JET	Low Power	J133-3			Q43	J113-4			Brn-Org	AE-26-1200	
12	BOTTOM JET	Low Power	J133-3			Q47	J113-5			Brn-Yel	AE-26-1200	
13	RIGHT JET	Low Power	J133-3			Q42	J113-6			Brn-Grn	AE-26-1200	
14	RIGHT ALIEN LOW	Low Power	J133-3			Q46	J113-7			Brn-Blu	AE-26-1500	
15	SAUCER SHAKE	Low Power	J133-3			Q41	J113-8			Brn-Vio	AE-26-1500	
16	DROP TARGET	Low Power	J133-3			Q45	J113-9			Brn-Gry	AE-26-1200	
17	RIGHT RAMP HIGH (2)	Flasher	J133-6	J134-5		Q28	J111-1	J112-1		Blk-Brn	#906	#906
18	RIGHT RAMP LOW (2)	Flasher	J133-6	J134-5		Q32	J111-2	J112-2		Blk-Red	#906	#906
19	RIGHT SIDE HIGH (2)	Flasher	J133-6	J134-5		Q27	J111-3	J112-3		Blk-Org	#906	#906
20	RIGHT SIDE LOW	Flasher	J133-6			Q31	J111-4			Blk-Yel	#89	
21	CENTER ARROW	Flasher	J133-6			Q26	J111-5			Blu-Grn	#906	
22	JETS	Flasher	J133-6			Q30	J111-6			Blu-Blk	#89	
23	SAUCER DOME	Flasher	J133-6			Q25	J111-7			Blu-Vio	#906	
24	MOTOR BANK	Flasher	J140-2			Q29	J111-8			Blu-Gry	14-8023	
25	LEFT RAMP LEFT (2)	Gen. Purpose	J133-6	J134-5		Q16	J109-1	J107-1		Blu-Brn	#906	#906
26	LEFT RAMP RIGHT (2)	Gen. Purpose	J133-6	J134-5		Q15	J109-2	J107-3		Blu-Red	#906	#906
27	LEFT SIDE HIGH (2)	Gen. Purpose	J133-6	J134-5		Q14	J109-3	J107-4		Blu-Org	#906	#906
28	LEFT SIDE LOW	Gen. Purpose	J133-6			Q13	J109-4			Blu-Yel	#989	
33	RIGHT GATE	High Power	J119-6,7			Q84	J120-6			Yel-Vio	A-14406	
34	LEFT GATE	Low Power	J119-6,7			Q86	J120-4			Org-Vio	A-14406	
35	DIVERTOR POWER	High Power	J119-8,9			Q81	J120-3			Yel-Gry	A-20099	
36	DIVERTOR HOLD	Low Power	J119-8,9			Q83	J120-1			Org-Gry	A-20099	
37	L.E.D. CLOCK	Flasher	J140-2				J110-1			Brn-Wht	A-20670	
38	L.E.D. DATA	Flasher	J140-2				J110-3			Vio-Wht	A-20670	
39	STROBE LIGHT	Flasher	J140-2				J110-4			Org-Wht	A-20718	
	General Illumination											
01	BOTTOM PLAYFIELD	G.I.	J106-1	J106-1		Q5	J106-7			Wht-Brn	#44	#555
02	MIDDLE PLAYFIELD	G.I.	J106-2			Q4	J106-8			Wht-Org	#44, #555	
03	TOP PLAYFIELD	G.I.	J106-3			Q3	J106-9			Wht-Yel	#44, #555	

	Flipper Circuits		Voltage Connections Playfield	Drive Transistors Power	Drive Transistors Hold	Drive Connectors Playfield	Drive Wire Colors Power	Drive Wire Colors Hold	Coil Part No.	Coil Color
29	Lower Right Flipper	Lwr. Rt. Power	J119-1 (Red-Grn)	Q90		J120-13	Yel-Grn		FL-11629	BLUE
30		Lwr. Rt. Hold	J119-1 (Red-Grn)		Q92	J120-11		Org-Grn		
31	Lower Left Flipper	Lwr. Lt. Power	J119-4 (Red-Blu)	Q87		J120-9	Yel-Blu		FL-11629	BLUE
32		Lwr. Lt. Hold	J119-4 (Red-Blu)		Q89	J120-7		Org-Blu		
33	Upper Right Flipper	Upr. Rt. Power	J119-6 (Red-Vio)	Q84		J120-6	Yel-Vio		SEE ABOVE	
34		Upr. Rt. Hold	J119-6 (Red-Vio)		Q86	J120-4		Org-Vio	SEE ABOVE	
35	Upper Left Flipper	Upr. Lt. Power	J119-8 (Red-Gry)	Q81		J120-3	Yel-Gry		SEE ABOVE	
36		Upr. Lt. Hold	J119-8 (Red-Gry)		Q83	J120-1		Org-Gry	SEE ABOVE	

J1xx=Power Driver Board; 24-6549=#44 bulb; 24-8704=#89 bulb; 24-8768=#555 bulb; 24-8802=#906 bulb

LAMP MATRIX

Yellow (B+) — Red

Row \ Column	1 Yellow-Brown J121-1 Q96	2 Yellow-Red J121-2 Q100	3 Yellow-Orange J121-3 Q95	4 Yellow-Black J121-4 Q99	5 Yellow-Green J121-5 Q94	6 Yellow-Blue J121-6 Q98	7 Yellow-Violet J121-7 Q93	8 Yellow-Gray J121-9 Q97
1 Red-Brown J125-1 Q104	SUPER JETS 11	BIG-O-BEAM 1 21	TRACTOR BEAM 1 31	RIGHT LOOP ARROW 41	ATTACK MARS 51	MARTIA"N" TARGET 61	CAPTURE 1 71	SHOOT AGAIN 81
2 Red-Black J125-2 Q108	SUPER JACKPOT 12	BIG-O-BEAM 2 22	TRACTOR BEAM 2 32	CENTER RAMP ARROW 42	D.C. U.S.A. 52	MARTI"A"N TARGET 62	CAPTURE 2 72	LEFT OUTLANE 82
3 Red-Orange J125-4 Q103	SUPER JETS 13	BIG-O-BEAM 3 23	TRACTOR BEAM 3 33	LEFT TOP LANE 43	LONDON ENGLAND 53	ATOMIC BLASTER 1 63	CAPTURE 3 73	LEFT RETURN 83
4 Red-Yellow J125-5 Q107	MARTIAN ATTCK MULTIBALL 14	LEF RAMP JACKPOT 24	RIGHT RAMP JACKPOT 34	RIGHT TOP LANE 44	LIGHT LOCK 54	ATOMIC BLASTER 2 64	LEFT LOOP JACKPOT 74	RIGHT RETURN 84
5 Red-Green J125-6 Q102	ANNIHILATION 15	LEFT RAMP ARROW 25	RIGHT RAMP ARROW 35	LEFT MOTOR BANK 45	LOCK 1 55	ATOMIC BLASTER 3 65	LEFT LOOP ARROW 75	RIGHT OUTLANE 85
6 Red-Blue J125-7 Q106	RETURN TO BATTLE 16	LOCK 2 26	MARTIAN ATTACK 36	CENTER MOTOR BANK 46	PISA ITALY 56	RIGHT LOOP JACKPOT 66	"M"ARTIAN TARGET 76	LAUNCH BUTTON 86
7 Red-Violet J125-8 Q101	CONQUER MARS 17	LOCK 3 27	RULE UNIVERSE 37	RIGHT MOTOR BANK 47	BERLIN GERMANY 57	EXTRA BALL 67	M"A"RTIAN TARGET 77	NOT USED 87
8 Red-Gray J125-9 Q105	DROP TARGET 18	CETER RAMP JACKPOT 28	STROKE OF LUCK 38	MAR"T"IAN TARGET 48	PARIS FRANCE 58	MART"I"AN TARGET 68	MA"R"TIAN TARGET 78	START BUTTON 88

SWITCH MATRIX

White — Green

Dedicated Grounded Switches	Row \ Column	1 Green-Brown J206-1 U20-18	2 Green-Red J206-2 U20-17	3 Green-Orange J206-3 U20-16	4 Green-Yellow J206-4 U20-15	5 Green-Black J206-5 U20-14	6 Green-Blue J206-6 U20-13	7 Green-Violet J206-7 U20-12	8 Green-Gray J206-8 U20-11	Flipper Grounded Switches
Orange-Brown J205-1 U17-5 Left Coin Chute D1	1 White-Brown J208-1 U18-11	LAUNCH BUTTON 11	SLAM TILT 21	TROUGH EJECT 31	MARTI"A"N TARGET 41	LEFT SLINGSHO 51	LEFT RAMP ENTER 61	RIGHT LOOP HIGH 71	NOT USED 81	Black-Green J208-13 Lower Right Flipper EOS F1
Orange-Red J205-2 U17-7 Center Coin Chute D2	2 White-Red J208-2 U18-9	NOT USED 12	COIN DOOR CLOSED 22	TROUGH BALL 1 32	MARTIA"N" TARGET 42	RIGHT SLINGSHO 52	CENTER RAMP ENTER 62	RIGHT LOOP LOW 72	NOT USED 82	Blue-Voilet J212-12 Lower Right Flipper Opto F2
Orange-Black J205-3 U17-11 Right Coin Chute D3	3 White-orange J208-3 U18-5	START BUTTON 13	NOT USED 23	TROUGH BALL 2 33	MAR"T"IAN TARGET 43	LEFT JET 53	RIGHT RAMP ENTER 63	LEFT LOOP HIGH 73	NOT USED 83	Black-Blue J208-12 Lower Left Flipper EOS F3
Orange-Yellow J205-4 U17-9 4th Coin Chute D4	4 White-Yellow J208-4 U18-7	PLUMB BOB TILT 14	ALWAYS CLOSED 24	TROUGH BALL 3 34	MART"I"AN TARGET 44	BOTTOM JET 54	LEFT RAMP EXIT 64	LEFT LOOP LOW 74	NOT USED 84	Blue-Gray J212-11 Lower Left Flipper Opto F4
Orange-Green J205-6 U16-9 Normal Function: Ser Credits; Test Function: Esc D5	5 White-Green J208-5 U19-11	NOT USED 15	NOT USED 25	TROUGH BALL 4 35	LEFT MOTOR BANK 45	RIGHT JET 55	RIGHT RAMP EXIT 65	LEFT SAUCER TARGET 75	NOT USED 85	Black-Violet J208-11 Upper Right Flipper EOS (NOT USED) F5
Orange-Blue J205-7 U16-11 Normal Function: Vol Down; Test Function: Down D6	6 White-Blue J208-7 U19-9	LEFT OUTLANE 16	LEFT RETURN 26	LEFT POPPER 36	CENTER MOTOR BANK 46	"M"ARTIAN TARGET 56	MOTOR BANK DOWN 66	RIGHT SAUCER TARGET 76	NOT USED 86	Black-Yellow J212-10 Upper Right Flipper Opto F6
Orange-Viloet J205-8 U16-7 Normal Function: Vol Up; Test Function: Up D7	7 White-Violet J208-8 U19-5	RIGHT RETURN 17	RIGHT OUTLANE 27	RIGHT POPPER 37	RIGHT MOTOR BANK 47	M"A"RTIAN TARGET 57	MOTOR BANK UP 67	DROP TARGET 77	NOT USED 87	Black-Gray J208-10 Upper Left Flipper EOS (NOT USED) F7
Orange-Gray J205-9 U16-5 Normal Function: Begin Test; Test Function: Enter D8	8 White-Gray J208-9 U19-7	SHOOTER LANE 18	EDDY SENSOR 28	LEFT TOP LANE 38	RIGHT TOP LANE 48	MA"R"TIAN TARGET 58	NOT USED 68	CENTER TROUGH 78	NOT USED 88	Black-Blue J212-9 Upper Left Flipper Opto F8

J2XX = CPU Board; ■ = Opto, Typically Closed

Information current at time of release.

16-10183.1